OSTOMY BAG GUIDING DEVICE MATERIALS AND PRINTER QUALITY

MECH 361 Final Report

April 28th, 2017

Jesse Gordon (10129521)
Advisor: Dr. Claire Davies

Executive Summary

An ostomy guide was designed to aid visually impaired patients who have received an ileostomy. To secure the ostomy bag to the skin and form a proper seal, an adhesive wafer must be placed exactly around the stoma. Misplacement of the wafer can cause leakage of waste, breaking of the adhesive seal and subsequent skin irritation to the surrounding area. The ostomy guide helps visually impaired users create the necessary seal and limit leakage. The end-user desired a product which would be easy to use, portable, easy to clean, durable and not require invasive surgery. After completing the initial design process and producing a preliminary prototype, further research was conducted into the materials used and desired manufacturing process, 3D printing. Two types of additive manufacturing technologies were researched. Fused Deposition Modeling is a technique in which a filament of thermoplastic is heated by a printer head and then extruded and layered onto the printer bed. The part is then manufactured layer by layer and then allowed to cool. PolyJet printing is the other method of 3D printing in which a liquid photopolymer is layered onto the printing bed. An ultraviolet light, passes over the freshly layered liquid, instantly curing and solidifying the layer. Four 3D printers found on the Queen's University campus were researched to manufacture the ostomy guide device including the Fortus 380mc and Dimension 1200es from McLaughlin Hall, the Objet30 Prime located in the Human Mobility Research Centre, and the Ultimaker 3 located at SparQ labs. In selecting the desired final material to be used for the final prototype, polycarbonate and ABS – M30 from the Fortus 380mc, ABS*plus* – P430 from the Dimension 1200es, High Temperature RGD525 and bio-compatible MED610 from the Objet 30 Prime and Ultimaker ABS from the Ultimaker 3 were researched. Initial data from mechanical and thermal specification sheets suggested that polycarbonate would be the ideal material for the ostomy guide. When attempting to print the ostomy guide in polycarbonate, the Fortus 380mc printer broke and therefore testing had to be completed on parts printed from the Dimension 1200es in ABS*plus* – P430. One part could be printed in polycarbonate to be used in mechanical testing. After performing sanitation and mechanical testing on the parts, it was found that ABS performed better in mechanical testing due to its flexibility. Due to its lower cost and better results, ABS was therefore selected as the desired material for the final prototype. Although testing was performed on ABS*plus* – P430 products, throughout the project, many misprints occurred on the Dimension 1200es. In order to limit the variance between parts, it was therefore determined that the final ostomy guide should be printed on the Fortus 380mc out of its ABS – M30 plastic. Although many setbacks and delays occurred throughout the process, the project still finished under the budget of $150 for a total project cost of $125.

Table of Contents

Executive Summary i
List of Figures iii
List of Tables 3
Introduction 2
Objectives and Scope 3
Design Requirements 3
a. Material 3
b. 3D Printing 4
c. Economics 4
Research 4
a. 3D Printers 5
Fused Deposition Modelling (FDM) 5
PolyJet 6
Fortus 380mc 6
Dimension 1200es 7
Objet30 Prime 8
Ultimaker 3 8
b. Materials 9
Polycarbonate 9
Ultimaker ABS Plastic 10
ABS – M30 10
ABS*plus* – P430 11
High Temperature RGD525 11
Bio-Compatible MED610 12
Results 12
Printer and Material Selection 12
Printing Results 13
Material Selection After Testing 18
Budget 18
Moving Forward 19
Learning Experiences 20
Conclusion 21

Works Cited 22
Appendices 25
Appendix A: Detailed Drawing of Ostomy Guide 25
Appendix B: Ostomy Guide Measurements 26

List of Figures

Figure 1: Prototype design of ostomy wafer guide 2
Figure 2: Photograph of Fortus 380mc FDM 3D printer. 6
Figure 3: Photograph of Dimension 1200es FDM 3D printer. 7
Figure 4: Photograph of Objet30 PolyJet 3D printer. 8
Figure 5: Photograph of Ultimaker 3 FDM 3D printer. 8
Figure 6: Photograph demonstrating off centre printing of ostomy guide from Dimension 1200es ABS misprint. 14
Figure 7: Photograph showing print overlap defect that was present on Dimension 1200es ABSplus misprints. 14
Figure 8: Photograph showing chip defects on Dimension 1200es ABSplus misprints. 15
Figure 9: Photograph showing no off-centre defect on the acceptable print from the Dimension 1200es in ABSplus. 15
Figure 10: Photograph demonstrating no print layer or chip defects on acceptable Dimension 1200es ABSplus print. 16
Figure 11: Height measurement of ostomy guiding device. 17
Figure 12: Outer and inner shaft diameter measurements of ostomy guide device. 18
Figure 13: CAD drawing of ostomy guide device. 25

List of Tables

Table 1: Cost estimate of ostomy bag supplies per year. 4
Table 2: Mechanical and thermal properties of polycarbonate 3D printing material [15]. 10
Table 3: Mechanical and thermal properties of Ultimaker ABS plastic [16]. 10
Table 4: Mechanical and thermal properties of ABS - M30 plastic [17]. 11
Table 5: Mechanical and thermal properties of ABSplus - P430 [18]. 11
Table 6: Mechanical and thermal properties of High Temperature RGD525 [20]. 12
Table 7: Mechanical and thermal properties of bio-compatible MED610 [22]. 12
Table 8: Average dimensions and variance between dimensions of all ostomy guide 3D prints. 17
Table 9: Measurements of height of all printed parts including misprints. 26
Table 10: Measurements of inner diameter of shafts of all printed parts including misprints. 26
Table 11: Measurements of outer diameter of shaft of all printed parts including misprints. 26

Introduction

An ileostomy is a surgery where part of the intestine is cut off, and a stoma is brought to the surface to allow waste to be expelled from the body. Patients who have had ileostomies attach bags to their stomas to catch the waste. Difficulties arise with patients who have uneven or sensitive skin, as the seal between the bag and the stoma may leak and cause skin irritation or infection. The bag works by placing an adhesive wafer over the stoma that sticks to the skin around it. The ostomy bag then snaps onto the wafer and stays in place. People with visual impairments, like the end-user for this project, have been found to have trouble aligning the wafer onto their stoma to create a proper seal.

There is currently no device on the market that helps visually impaired patients who have had ileostomies with this issue. There are surgical alternatives where a valve is placed under the skin and waste can be expelled by opening the valve, but this method is highly invasive, costly, and still not fully developed. Therefore, a non-invasive medical device that makes it easier for visually impaired ileostomy patients to align their wafer with their stomas was designed so that end-users can easily change their own bags and be independent. The proposed design can be seen in Figure 1.

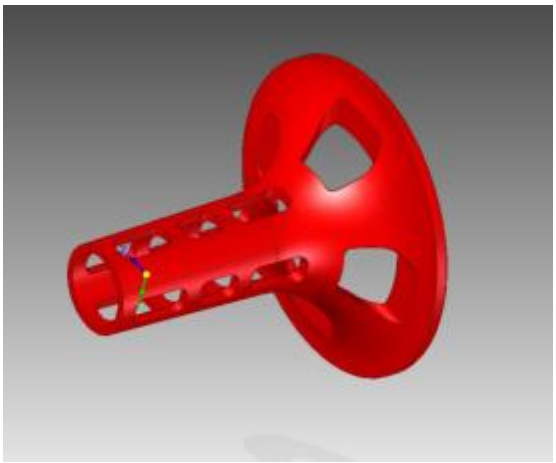

Figure 1: Prototype design of ostomy wafer guide

To use the ostomy guide, the guide is placed on a surface sitting on the wider side (the base). The user then slides the ostomy wafer onto the thinner side of the guide (the shaft) with the adhesive layer pointing upwards. The end-user then aligns the shaft with their stoma and when perfect alignment occurs, they slide the wafer down onto their skin. This perfectly aligns the wafer to the stoma and creates the necessary perfect seal.

Objectives and Scope

Although the device was initially deemed successful by the end user, further research and testing needed to be completed. The research and testing guaranteed that all possible risks could be alleviated, ensured that all design regulations are met as well as improved the design through more iterations using the end-user's feedback.

These tasks were divided among the three group members of the original engineering team. This section focused specifically on the selection of materials that meet health and design regulations as well as researched the desired manufacturing method, 3D printing. In completing this research, a durable, easy to clean material was selected as well as a 3D printing process which will ensure the durability and high performance of the product for a sufficient lifespan after being purchase by the end user.

By the end of this section of the project, the design should be made of a material that is non-irritating to the skin as well as approved by Health Canada as being a material that can safely encounter skin on an everyday basis. This will ensure that the device will not cause further irritation to the end user's skin. After selecting an appropriate material, the project was passed on to be tested to ensure that the device can be properly sterilized throughout its lifespan as well as be able to withstand everyday applications such as dropping and stepping on the device.

Design Requirements

After meeting with the end user in September, their needs and desires for the final design were considered and constant input was used to make slight design iterations. These functional requirements and end user's needs included being able to properly align the wafer and the stoma without the need for invasive surgery, easy to use for elderly people who may have limited dexterity, durable as well as be portable for emergencies when the wafer seal would need to be changed when the end user was away from home.

a. Material

Selection of material focused on ensuring the durability of the final product. The material chosen had to meet all medical device regulations from the SOR/98-282 Minister of Justice Consolidation [1] as well as all Federal Drug Administration Class regulations. Also, due to the choice of manufacturing method of 3D printing, the material had to be able to be 3D printed. In deciding the sterilization process, the material might had to be able to withstand higher temperatures to be withstand a dishwashing process without warping of the material occurring.

b. 3D Printing

3D Printing, also known as rapid prototyping, was decided upon to be the manufacturing method of choice as it allows for maximum customizability to ensure that each device printed would work perfectly with the abilities of the end-users as well as the geometry of their stomas. In researching the 3D printers and printing process, the quality of the print as well as type of printer was considered. Printing was performed on the Queen's University campus to limit costs.

c. Economics

A maximum budget of $150 was set for the project by the overseeing engineer, Dr. Claire Davies. See Budget section of results for final budget breakdown. Through the Government of Ontario, ileostomy patients who qualify for financial assistance can receive $975 per ostomy each year [2]. Estimates of the cost of ostomy supplies for a patient can be seen below in Table 1 assuming the patient changes their ostomy bag once per week.

Table 1: Cost estimate of ostomy bag supplies per year.

Item	Price/unit [$]	# of Units per year	Total [$]
Hollister 15402 - New Image Skin Barrier (5 per Box) [3]	48.13	11	529.43
Hollister - 18002 New Image Pouch (10 per box) [4]	48.08	6	288.48
Coloplast - Brava No Sting Paste (2 oz.) [5]	14.82	6	88.92
Total [$]:			906.83

Without considering other cleaning supplies that are needed to sanitize the skin before and after use as well as the possible need to change the ostomy bag more frequently due to improper seals, government financial assistance plans barely cover necessary costs. As well, the cost estimate does not include the costs some ileostomy patients undertake to have a registered Enterostomal Therapy nurse come and aid in the changing of ostomy bags. To further limit large expenses of ostomy bag users, a low-cost solution must be designed.

Research

Although it was initially planned to choose the desired material first and then research which printer on the Queen's campus could print such material, in the middle of the researching process, it was determined

that a better approach would be to examine which materials could be printed on campus and choose from those selections, ensuring that all required regulations were met.

Initial research, aided by Dr. Tim Bryant, found that ostomy devices fall into the FDA Class I which are, "devices … deemed to be low risk and are therefore subject to the least regulatory controls." [6] [7]. Many household devices such as dental floss and elastic bandages are classified as Class I devices [7]. This was an important starting point as it allowed many materials to be considered that are not bio-compatible. Therefore, selecting a 3D printer before determining a desired material was an appropriate process.

a. 3D Printers

Four 3D printers were considered for the manufacturing process. The two printers in McLaughlin Hall workshop, the Fortus 380mc and the Dimension 1200es were considered for the project as well as the Objet30 Prime from the Human Mobility Research Center and lastly the Ultimaker 3 at SparQ Labs. Although there are various kinds of 3D printers on the market today, the four printers researched used fused deposition modelling (FDM) or PolyJet technology in their rapid prototyping processes.

Fused Deposition Modelling (FDM)

Fused Deposition Modelling (FDM) printing is currently the most common 3D printing method [8]. FDM printers build parts by heating and extruding thermoplastic filaments layer by layer. This is done by heating the solid filament to a semi-liquid stated and depositing ultra-fine beads along the extrusion path to build a layer. When support for the product is needed, the 3D printers can use two different types of support materials, Breakaway Support Technology (BST) or Soluble Support Technology (SST) materials [8]. Breakaway support materials are layered with the part as it is being produced. Once manufacturing has been completed, the support material can then be broken off by hand leaving the final product. Soluble support materials are layered in the same manner as breakaway supports, however once manufacturing is complete, the part and support material are submerged in a water based solution and the support material dissolves leaving just the final product. FDM printers are the only 3D printers to manufacture products in industrial grade thermoplastics which allows printed products to be stronger as well as withstand higher temperatures than other 3D printing methods [8]. Before printing can begin for FDM printers, a computer-aided design file must be created and uploaded to the printer in a .stl format. Various technologies similar to FDM exist today and are used in many different 3D printers such as MakerBot's Fused Filament Fabrication (FFF) [9].

PolyJet

PolyJet manufacturing works similarly to Inkjet printers, however, instead of layering ink on the surface, thin layers of liquid photopolymer are jetted onto the printing bed [10]. A UV light then follows the printer head to instantly cure the plastic which then solidifies the previously liquid layer. PolyJet printing allows for prototypes with complex geometries to be printed with fine details and smooth surfaces that mimic a final product's aesthetics. PolyJet printers can print over 100 material combinations to maximize material properties and in a variety of colours. When complex shapes or overhangs require support, a removable material is jetted to support the final product. Once printing is completed, the support material can be removed by breaking it away by hand or by submerging the part in a water or solution bath. No post-curing is needed and the parts are ready to use directly after coming out of the 3D printer. PolyJet printers can also produce accurate molds and fixtures to be used in other manufacturing processes. Unlike FDM printers which creates anisotropic parts, PolyJet printing allows for more truly isotropic parts to be created which eliminates weakness in one plane [10].

To determine which printer would perform the best and manufacture the final product to the desired specifications, further research was conducted into each of the printers.

Fortus 380mc

Figure 2: Photograph of Fortus 380mc FDM 3D printer.

The Fortus 380mc is a fused deposition modelling (FDM) printer produced by Stratasys, who's founder, Scott Crump invented FDM. The Fortus 380mc can print in a wide variety of materials including ABS plastic, polycarbonate and nylon. The printer can print to a 5 thou (0.005 in.) or 10 thou (0.010 in.) resolution. The Fortus 380mc comes with both breakaway and soluble support material. Like most Stratasys 3D

printers, the Fortus 380mc uses the Insight software to give users total control of all build parameters including customizing the location of support material and to optimize the build orientation in order to maximize strength of final products as well as surface finish [11].

Dimension 1200es

Figure 3: Photograph of Dimension 1200es FDM 3D printer.

Like the Fortus 380mc, the Dimension 1200es is a FDM printer produced by Stratasys. The Dimension 1200es prints exclusively in the ABS*plus* modeling material which is a production grade thermoplastic that mimics the performance and durability of final products. The Dimension 1200es layers material to a thickness of 10 or 13 thou in both the ABS*plus* and support material. The Dimension 1200es comes with both breakaway and soluble support material. McLaughlin Hall currently has both the breakaway and soluble support material printer models [12].

Objet30 Prime

Figure 4: Photograph of Objet30 PolyJet 3D printer.

The Objet30 Prime is a PolyJet printer produced by Stratasys. It can print in a wide variety of materials including a high temperature material (RGD525) to sustain hot air and water flow, a bio-compatible material (MED610) for medical and dental products and even rubber-like materials. The Objet30 layers material to a thickness of 1.1 thou (0.0011 in.) and can have an accuracy of approximately 3.9 thou (0.0039 in.). The Objet30 can build parts up to 11.57 x 7.55 x 5.85 inches. The support materials jetted by the Objet30 Prime uses two types of support materials. One material is removed using a waterjet cutter and the other is a Soluble Support Technology (SST) material [13].

Ultimaker 3

Figure 5: Photograph of Ultimaker 3 FDM 3D printer.

The Ultimaker 3 is a dual extrusion desktop 3D printer produced by Ultimaker. It is a FDM printer that can print in in ABS and PLA plastic as well as nylon. The Ultimaker 3 has a layer resolution of 0.78 (0.00078 in.) to 7.87 thou (0.00787 in.) and is accurate to 0.5 thou (0.0005 in.) in the X and Y planes and 0.098 thou (0.000098 in.) in the Z plane. The Ultimaker 3 has a build volume of 7.8 x 8.5 x 7.9 inches. The support material used by the Ultimaker 3 is a Soluble Support Technology (SST) which can be removed by submerging the printed part in water [14].

b. Materials

Based on the 3D printers available on the Queen's University campus, polycarbonate, ABS plastic, ABS*plus* – P430, High Temperature RGD525 and Bio-compatible MED610 were considered for the final product material. Along with the material specifications provided by the respective 3D printer manufacturers, input into material selection was considered from the various printer technicians as well as Dr. Claire Davies, Dr. Tim Bryant and Prof. Jan Sneep. Flexural strength was compared when possible for all materials instead of tensile strengths as the ostomy guide device would be exposed to similar loadings when in use do to end-users stepping on the device. Compressive mechanical properties were noted when available as these are the true possible loading scenarios of the device, however, most mechanical specification sheets did not have these values and therefore compression testing of the device will have to be conducted.

Polycarbonate

Polycarbonate is the most widely used thermoplastic, known for its superior strength and durability. It is used in the automotive and medical industries. Polycarbonate printed on a Fortus 3D Production System, "is 5 to 60 percent stronger than a part made on previous FDM systems." [15]. Polycarbonate is known to have better mechanical properties than normal ABS plastic. In the Fortus 380mc, polycarbonate can be printed to a 0.010-inch layer thickness with either breakaway or soluble support structure material. Some material properties of polycarbonate can be found below in Table 2. Note that the ZX Axis is the orientation with the wider base sitting normally and the ostomy guide shaft pointed in the upwards direction. The ostomy guide was printed in this orientation as well [15].

Table 2: Mechanical and thermal properties of polycarbonate 3D printing material [15].

	ZX Axis
Flexural Strength [MPa]	68
Compressive Strength, Yield [MPa]	64
Compressive Strength, Ultimate [MPa]	65
Heat Deflection Temp @ 0.455 MPa [°C]	138
Glass Transition Temp. [°C]	161

Ultimaker ABS Plastic

ABS is an impact resistant material that is known for its excellent mechanical properties. The Ultimaker 3 prints its own form of ABS plastic which is specially formulated to minimize warping and ensure consistent interlayer adhesion. ABS plastic is used by various industries because of its mechanical properties. Ultimaker's ABS is ideal for functional prototyping as well as short run manufacturing. However, Ultimkaer states that its ABS is not suitable for, "food contact and in-vivo applications." [16]. In the Ultimaker 3, ABS is layered to the previously stated standard Ultimkaer 3 thickness. With the Ultimaker ABS, the support material is a water-soluble support technology (SST) which can be dissolved when submerged in a water bath [16]. Relevant mechanical and thermal properties can be found below in Table 3.

Table 3: Mechanical and thermal properties of Ultimaker ABS plastic [16].

	ZX Axis
Flexural Strength [MPa]	n/a
Glass Transition Temp. [°C]	97

ABS – M30

ABS – M30 is a production-grade thermoplastic which is ideal for functional prototypes, moderate-requirement parts and production parts. ABS – M30 is 25 to 70 percent stronger than normal ABS plastic with a greater tensile, impact and flexural strength. As well, the bonding between layers in ABS – M30 is much stronger for a significantly more durable part. On the Fortus 380 mc, ABS – M30 is layered with a thickness of 10 thou (0.010 in.). ABS – M30 uses soluble support material for a clean removal of supports [17]. Relevant mechanical and thermal properties from the ABS – M30 specification sheet can be found below in Table 4.

Table 4: Mechanical and thermal properties of ABS - M30 plastic [17].

	ZX Axis
Flexural Strength [MPa]	48
Heat Deflection Temp @ 1.82 MPa [°C]	82
Glass Transition Temp. [°C]	108

ABS*plus* – P430

Similar to ABS – M30, ABS*plus* is a production-grade thermoplastic which mimics the durability of production parts. It is an ideal material for producing prototypes. ABS*plus* has a greater tensile, impact and flexural strength than normal ABS plastic and the layer bonding of ABS*plus* is much stronger than that of standard ABS. On the Dimension 1200es, it is layered with a thickness of 10 thou (0.010 in.). ABS*plus* comes in a variety of colours including white, black, fluorescent yellow and blue. When printing ABS*plus* in the Dimension 1200es either breakaway or soluble support materials can be used [18]. Some relevant thermal and mechanical properties of ABS*plus* can be found below in Table 5.

Table 5: Mechanical and thermal properties of ABSplus - P430 [18].

	ZX Axis
Flexural Strength [MPa]	35
Heat Deflection Temp @ 0.455 MPa [°C]	96
Glass Transition Temp. [°C]	108

High Temperature RGD525

High Temperature RGD525 is a PolyJet photopolymer to be used in the Objet30 Prime printer. High Temperature (RGD525) is heat-resistant material which can simulate the thermal performance of normal plastics and is ideal to use during thermal testing. The High Temperature material has a wide range of uses including heat resistant jigs and fixtures, hot air and hot water testing as well as taps, pipes and household appliances. The High Temperature material has a heat deflection temperature of 63-67 degrees celsius, however, this can be increased to 75-80 degrees celsius using a thermal post treatment in a programmable oven. Both breakaway and soluble support materials can be used with the High Temperature material. As well, to increase or alter mechanical and material properties, the RGD525 can be combined with all PolyJet materials except for the bio-compatible material [19]. A summary of the mechanical and material properties of RGD525 can be found below.

Table 6: Mechanical and thermal properties of High Temperature RGD525 [20].

Flexural Strength [MPa]	110-130
Heat Deflection Temp @ 0.455 MPa [°C]	63-67
Heat Deflection Temp @ 0.455 MPa (after post treatment) [°C]	75-80
Glass Transition Temp. [°C]	62-65

Bio-Compatible MED610

Bio-compatible MED610 is a PolyJet photopolymer and a medical rapid prototyping material. MED610 has been approved medically for cytotoxicity, genotoxicity, delayed type hypersensitivity, irritation and USP plastic class VI. It is ideal for prolonged skin contact of more than 30 days. Bio-compatible MED610 has an easy to remove support material that can be removed by hand or by WaterJet so that small and delicate features remain intact [21]. A summary table of relevant mechanical and thermal specifications can be found below in Table 7.

Table 7: Mechanical and thermal properties of bio-compatible MED610 [22].

Flexural Strength [MPa]	75-110
Heat Deflection Temp @ 0.455 MPa [°C]	45-50
Glass Transition Temp. [°C]	52-54

Results

Printer and Material Selection

After doing thorough research into the printers available on the Queen's University campus, it was initially decided that the Objet30 with the bio-compatible material would be the printer and material of choice. This was due to the PolyJet technology the Objet30 uses which would allow for a finer finish and better overall aesthetics. This selection was made before having spoken to Dr. Tim Bryant who advised that the Federal Drug Administration (FDA) class of ostomy products be researched to determine what level of biocompatibility and how stringent regulations are for ostomy products.

As previously stated, ostomy products are categorized as a Class I medical device by the FDA. Therefore, the bio-compatible material would not be necessary as this would unnecessarily increase costs. Therefore, the next material that was desired was the High Temperature RGD525 of the Objet 30. This would allow for the same fine finish that could be achieved as the bio-compatible MED610 due to the PolyJet printing process, however, a lower biocompatibility would be achieved, therefore cutting costs as well as regulations that would need to be met with the use of the bio-compatible material. As well, the high heat deflection temperature of the RGD525 would allow the ostomy guide device to be sanitized in the dishwasher as desired. Input was requested from Leone Ploeg, the Executive Manager of the Human Mobility Research Centre (HMRC) at Queen's University as well as Dr. Manuela Kunz, about the RGD525 High Temperature material and it was determined that ABS and polycarbonate have better thermal properties. Therefore, it was decided that a more widely used plastic, such as ABS or polycarbonate, would be sufficient for the ostomy guide device.

In order to make a final selection of material, the ABS*plus* – P430 of the Dimension 1200es, the Ultimaker ABS of the Ultimaker 3 and ABS – M30 and polycarbonate of the Fortus 380mc were compared. Due to the large differences in layer resolution of the Ultimaker 3, as well as the lower thermal properties of the Ultimaker ABS, both options were not considered viable for the ostomy guide with the desired design criteria. Comparing the ABS*plus* – P430 and the ABS – M30, the ABS – M30 was found to have a higher flexural strength which made it the more viable ABS plastic option due to most other properties being similar. In comparing the ABS – M30 and the polycarbonate, the polycarbonate was found to have a much higher glass transition temperature, so warping will only occur at higher temperatures as well as a higher flexural strength. These properties as well as the similar printing properties of the two materials, due to them being printed on the same 3D printer, led to the final decision that the product should be made from polycarbonate on the Fortus 380mc Fused Deposition Modeling printer. In order to confirm this selection, mechanical and sanitation tests were performed on the parts to determine if the advertised mechanical properties would match the true values found from testing. It was expected that values would differ greatly as testing performed by the manufacturer was performed on an ideal compression sample, whereas testing done for the ostomy guide would be on the device itself with a much more complex geometry.

Printing Results

A first print was ordered in polycarbonate to determine the initial print quality. Unfortunately, after the print was ordered, the Fortus 380mc broke. The original print was scheduled to be sent to the

manufacturer, Cimetrix Solutions Inc., however this print was never actually ordered and therefore never received. In order to limit delays for the project and move forward with sanitization and compression testing, three parts were ordered in the ABS*plus* – P430 plastic on the Dimension 1200es. When the parts were manufactured, there was either a printer malfunction or a problem with the computer aided design file and that five prints had been attempted and only one was manufactured successfully. The defects in the prints included the shaft of the device to be off-centre from the base of the ostomy guide as well as small bumps along the shaft where the printer overlapped material and small chips in the parts. Examples of these defects can be seen below in Figure 6, Figure 7 and Figure 8 respectively.

Figure 6: Photograph demonstrating off centre printing of ostomy guide from Dimension 1200es ABS misprint.

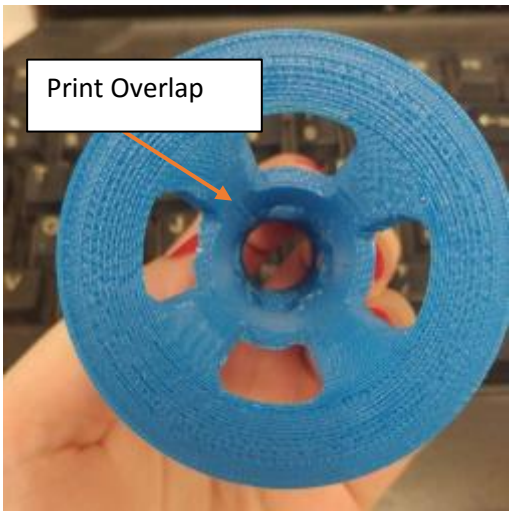

Figure 7: Photograph showing print overlap defect that was present on Dimension 1200es ABSplus misprints.

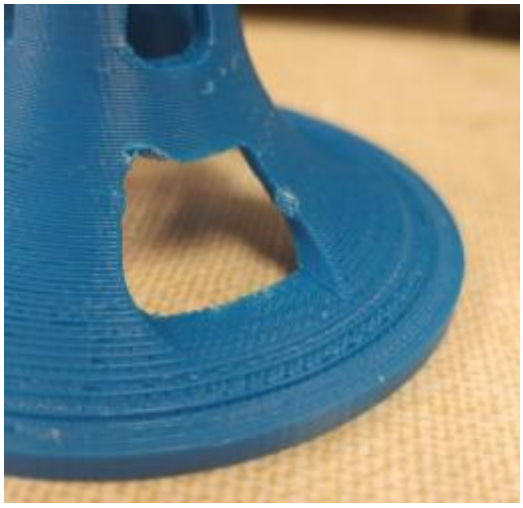

Figure 8: Photograph showing chip defects on Dimension 1200es ABSplus misprints.

Although these many defects were present in many of the misprints made, the one satisfactory print produced in the ABS*plus* was not off-centre and had minimal to no defects as seen in Figure 9 and Figure 10

Figure 9: Photograph showing no off-centre defect on the acceptable print from the Dimension 1200es in ABSplus.

Figure 10: Photograph demonstrating no print layer or chip defects on acceptable Dimension 1200es ABSplus print.

With possible further delays occurring due to a busy print queue at McLaughlin Hall, the ABS misprints were used for testing as it was estimated that this would yield conservative mechanical and sanitation results. Once the Fortus 380mc was repaired, one polycarbonate print was ordered. Sanitation could not be performed on the polycarbonate part due to the white powder not being able to be seen on the white part, however, compression testing was performed to determine the difference in mechanical strength of the part compared to the ABS*plus* misprints.

Looking closer at the various prints produced, there were many cases where small defect were present, either due to improper bonding between layers or chips in the parts, possibly due to breaking of support materials.

In order to determine the dimensional difference between prints, defining important features of the product such as the inner and outer diameter of the device of the shaft as well as the height were measured. Also, the original prototype print and the original polycarbonate print were measured to see variability between printers. For each measurement, the average of three measurements were taken and then the variance between the averages was calculated. The results for the overall average of each

dimension with the variance can be seen in Table 8 below. For a list of all the measurements for each part see Appendix B: Ostomy Guide Measurements.3

Table 8: Average dimensions and variance between dimensions of all ostomy guide 3D prints.

	Height [mm]	Inner Diameter [mm]	Outer Diameter [mm]
Average	63.76	16.08	18.92
Variance	0.0011	0.2018	0.0017

Photographs of where measurements were taken can be seen below in Figure 11 and Figure 12.

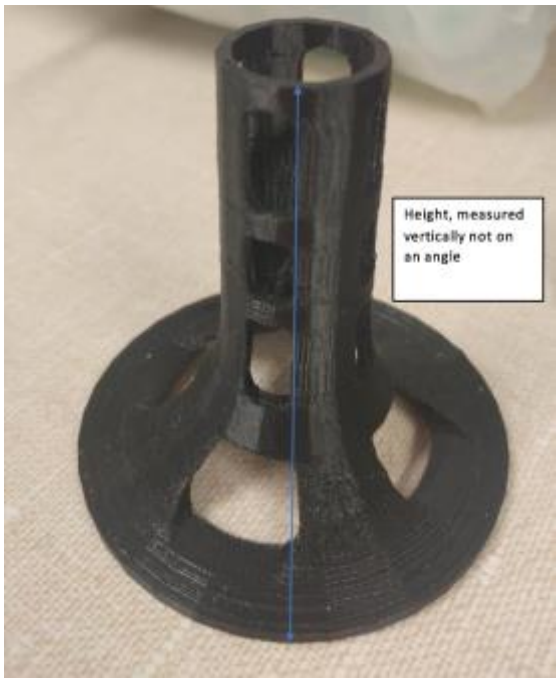

Figure 11: Height measurement of ostomy guiding device.

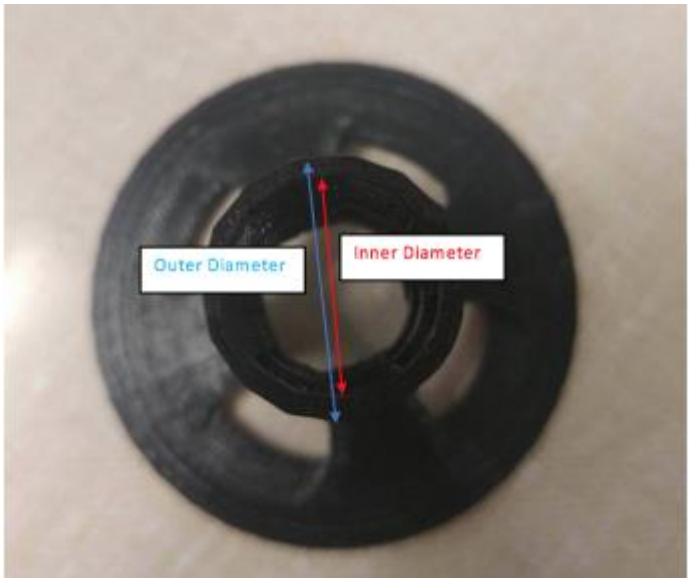

Figure 12: Outer and inner shaft diameter measurements of ostomy guide device.

Material Selection After Testing

After group member Jelena Gligorovic performed mechanical and sanitization testing on the ABS*plus* and polycarbonate parts, it was determined that in the compression test the ABS*plus* performed better than the polycarbonate. Due to this, and the lower cost of printing as well as similar thermal results, ABS was selected as the final print material for the end-user. Due to the many misprints that occurred using the Dimension 1200es printer, and due to the similar mechanical and thermal properties, it was decided that the ABS – M30 from the Fortus 380mc would be used as the final product print material. However, due to time, budget and resource constraints, it is advised that further testing be completed on the products to confirm that ABS – M30 is the best material for the ostomy guide application.

Budget

By the end of the project, a total $125 was spent in total for the various prints of the ostomy guide. Due to the many misprints by the Dimension 1200es, the testing team could receive many parts to use for sanitation and compression testing without the project costs increasing. The one satisfactory print in ABS*plus* from the Dimension 1200es cost a total of $25. As well, Mr. Andy Bryson managed to manufacture one ABSplus print on the Fortus 380mc for a cost of $30. A polycarbonate print was made on the Fortus 380mc which was used in compression testing. The polycarbonate part cost $40. Lastly, the final print, to be delivered to the end-user was made from ABS*plus* – P430 on the Fortus 380mc for a cost of $30. Therefore, the project finished under the original budget of $150 with a total project cost of $125.

Moving Forward

After spending approximately 18 weeks conceiving, designing and implementing the ostomy guide device, there is still more to be done to perfect the final product. From a manufacturing and materials standpoint of the project, refinements can be made to improve both aspects.

Although 3D printing allows for customizability between various parts for end-users of different sized stomas, it was found that between different prints, although not substantial, there is a difference in dimensions of approximately 1 millimeter. This problem could be dealt with in multiple ways. Firstly, printer manufacturing companies can be contacted in order to determine optimal printing conditions and fine tune the printer used to minimize this variability. As well, a more precise printer can be used which will also be able to limit the variance between parts. Another way to deal with this problem could be to alter the manufacturing process used. Injection molding would be the easiest way to reproduce the ostomy guide and by using the same mold, little variability will be present. However, the cost of an injection mold can be very costly at approximately $5000 per mold, according to Dr. Tim Bryant. Another manufacturing method that could be used to produce the part is a combination of turning, milling and possibly drilling. Although this might increase the time to produce each part, the accuracy of each dimension would be greatly increased as these are much more precise processes. However, from an environmental perspective, 3D printing creates nearly no waste as only the material that is required is used and therefore is more environmentally friendly then the subtractive manufacturing processes listed above.

If 3D printing is determined to be the desired manufacturing process, then from the research conducted, a PolyJet printer might be able to give a smoother finish to the product. This will aid in the sterilization of the product as fewer particles will be able to get lodged in the grooves that are present with FDM printing. Other materials that can be printed on the Objet30 Prime and other PolyJet printers with similar properties to ABS and polycarbonate can be researched and used to maintain the thermal and mechanical properties desired while increasing the aesthetics of the part.

When considering different materials to be used for the part, the best course of action would be to contact a materials company such as DuPont and work with the engineers of DuPont to create a material that can be used in the 3D process while also having superior thermal and mechanical properties. This would allow the device to be sanitized in the dishwasher without warping to the product occurring and deterioration over time. As well, polycarbonate faltered as the desired material in the end due to its high cost. Talking to manufacturers could possibly limit the cost of polycarbonate parts. If this were a possibility then

retesting of polycarbonate could yield results that would show better thermal and mechanical properties than initially tested. Further research showed that on the higher grade Fortus 900mc FDM printer, manufactured by Stratasys, there exists a polycarbonate-ABS plastic hybrid material. This material combines the strength and thermal properties of polycarbonate with the flexibility of ABS plastic [23]. This hybrid appears to meet all the original design criteria and therefore ordering a print from this material is strongly advised.

Making the ostomy device portable was a design criteria that was deemed to be important in the design process. However, in order to maintain the proper sterilization of the product, an important step moving forward would be to design a carrying case so that no contamination will occur to the product between uses and when moved from one location to another. Currently, the proposed carrying case is a plastic zipper storage bag. This is a very inexpensive solution that every end-user will have in their home. However, a proper carrying and protection case could be a useful addition to the ostomy guide that would be appreciated by end-users. As well, without any form of instruction, some end-users might not think of possible contamination between uses. Therefore, with the current solution; an in-depth instruction manual must accompany the ostomy guide device to ensure that proper sterilization and storage of the ostomy guide occurs.

Learning Experiences

Having gone through the nearly complete design process of the ostomy guide device and dealt with the research and selection of the material and manufacturing process, there have been some valuable lessons that I have learned regarding the design process. As well, there are some aspects of this project that I would do differently, given the chance to redo and go through the design process again.

One of the most valuable lessons I learned from completing this project is that unpredictable delays will always occur. For this project, the Fortus 380mc printer breaking as well as the busy print queue caused delays that could not be avoided or predicted. Luckily, Jelena's original timeline for the project included two buffer weeks for delays whereas my timeline was much more optimistic with no delays occurring. Due to the foresight of Jelena, the project did not become too delayed and although in this case delays did not mean an increase in project cost, usually there is an undesirable price increase associated with increased project time. This was an important lesson I learned in the design process because increasing costs of projects could affect the customer's willingness to continue the project. Staying on budget and on time is vital to any project and in the future, I will ensure that extra time is allotted due to these unforeseen circumstances.

In minimizing time spent on various parts of the project, I found that in the end, a lot of time was wasted on material selection. I originally thought that the product had to be bio-compatible and this led to a lot of research being conducted on bio-compatible materials that could be printed on campus. However, this was found to not be useful as Dr. Tim Bryant guided me to find that ostomy products are Class 1 products and need not be made from bio-compatible materials. Had I spoken to Dr. Bryant much earlier, the time wasted researching bio-compatible and 3D printable materials would have been eliminated and possibly put the project ahead of schedule and the unforeseen delays wouldn't have affected the project as drastically. Therefore, I learned that with any project, although research is a vital aspect, getting advice from industry experts could greatly help in guiding the project in the right direction from the beginning.

If I were to redo the project, with a larger budget and more time, a useful step could have been to print the ostomy guide on all researched printers and in all desired materials. This way, the various printers could be definitively tested as well as the materials could be compared to one another. From the initial prints in each material and from each printer, a better decision could have been made from the beginning on which printer and material would work best for the ostomy guide application. Although this step might take longer to have all the parts manufactured in the different materials, in the end, less time would need to be spent in the testing stage comparing materials and more time could be spent on the actual testing of the device as well as user testing and receiving important feedback on the product from the user.

Conclusion

A successful and functional final prototype has been designed using a satisfactory material and manufacturing process. In order to determine the necessary design criteria, the end-user was consulted and a list of design criteria including ease of use, durability and portability in order to properly align the adhesive ostomy wafer to the stoma making sure a perfect seal is created on every use. The perfect seal would eliminate leakage of waste that was previously occurring and the subsequent skin irritation caused by the leakage. In the selection of materials and 3D printer to be used in the rapid prototyping process, all possible resources on the Queen's University Campus were researched. This included consulting professors of Queen's University as well as researchers at the Human Mobility Research Centre (HMRC) at Queen's University. Out of the available 3D printers on campus, two 3D printing methods were researched, Fused Deposition Modeling (FDM) and PolyJet. The FDM printers researched were the Fortus 380mc and Dimension 1200es in McLaughlin Hall as well as the Ultimaker 3 located in SparQ Labs. The Objet 30 from the HMRC was the lone PolyJet printer researched for the manufacturing of the ostomy guide device. From the available printers on campus, a list of appropriate materials was compiled. The list

included polycarbonate and ABS – M30 from the Fortus 380mc, ABS*plus* from the Dimension 1200es, High Temperature RGD525 and bio-compatible MED610 from the Objet30 and lastly the Ultimaker ABS from the Ultimaker 3. Initial research suggested that polycarbonate would be the ideal material to manufacture the ostomy guide, however after further sanitation and mechanical testing, ABS plastic was decided upon to be the final print material due to its lower cost and better mechanical testing results. Moving forward with the project, it is advised to discuss with different 3D printing manufacturers in order to perfect the manufacturing process or to research a different more precise manufacturing process such as molding or machining. Throughout the project many unforeseeable delays occurred such as the Fortus 380mc printer breaking, however, by advising industry experts as well as preparing buffer weeks to minimize delays, the project finished on schedule and under the budget of $150 for a total cost of $125.

Works Cited

[1] Minister of Justice, "Medical Devices Regulations," 27 September 2017. [Online]. Available: https://www.emergogroup.com/sites/default/files/canada-medical-devices-regulations-sor-98-282.pdf.

[2] Government of Ontario, "Enteral feeding and ostomy," [Online]. Available: https://www.ontario.ca/page/enteral-feeding-and-ostomy.

[3] CANMedDirect.ca, "Hollister 15402 - New Image FlexWear Convex Floating Flange, Green, 1 3/4", can cut up to 1", BX 5," [Online]. Available: https://www.canmeddirect.ca/hollister-15402-bx-5-new-image-flexwear-convex-floating-flange-green-1-3-4-can-cut-up-to-1.html. [Accessed 2017].

[4] CANMedDirect.ca, "Hollister 18002 - New Image Ultra Clear 12" Drain with LnR Closure, 1 3/4" Green, BX 10," [Online]. Available: https://www.canmeddirect.ca/hollister-18002-bx-10-new-image-ultra-clear-12-drain-with-lnr-closure-1-3-4-green.html. [Accessed 2017].

[5] CANMedDirect.ca, "Coloplast 12050 - BRAVA No Sting Paste, 2oz. (60g) Tube, Box of 1 Tube, BX 1," [Online]. Available: https://www.canmeddirect.ca/coloplast-12050-bx-1-brava-no-sting-paste-2oz-60g-tube-box-of-1-tube.html. [Accessed 2017].

[6] U.S. Department of Health & Human Services, "Product Classification," [Online]. Available: https://www.accessdata.fda.gov/scripts/cdrh/cfdocs/cfpcd/classification.cfm?start_search=1&DeviceName=&ProductCode=&ThirdParty=&DeviceClass=1&SUBMISSION_TYPE_ID=4&GMPExempt=N&Panel=&RegulationNumber=876.5900&PAGENUM=10&SortColumn=DeviceName. [Accessed 2017].

[7] U.S. Department of Health & Human Services, "FDA Basics," [Online]. Available: https://www.fda.gov/AboutFDA/Transparency/Basics/ucm194438.htm. [Accessed 2017].

[8] Stratasys, "FDM Technology," [Online]. Available: http://www.stratasys.com/3d-printers/technologies/fdm-technology. [Accessed 2017].

[9] E. Palermo, "Fused Deposition Modeling: Most Common 3D Printing Method," [Online]. Available: http://www.livescience.com/39810-fused-deposition-modeling.html. [Accessed 2017].

[10] Stratasys, "PolyJet Technology," [Online]. Available: http://www.stratasys.com/3d-printers/technologies/polyjet-technology. [Accessed 2017].

[11] Stratasys, "Fortus 380mc and Fortus 450mc," [Online]. Available: http://www.stratasys.com/3d-printers/production-series/fortus-380-450mc. [Accessed 2017].

[12] Stratasys, "Dimension 1200es," [Online]. Available: http://usglobalimages.stratasys.com/Main/Files/Machine_Spec_Sheets/PSS_FDM_Dim1200es.pdf. [Accessed 2017].

[13] Stratasys, "Objet30 Prime," [Online]. Available: http://www.stratasys.com/3d-printers/design-series/objet30-prime. [Accessed 2017].

[14] Ultimaker, "Ultimaker 3 Specifications," [Online]. Available: https://ultimaker.com/en/products/ultimaker-3/specifications. [Accessed 2017].

[15] Stratasys, "PC (polycarbonate) Specification Sheet," [Online]. Available: http://usglobalimages.stratasys.com/Main/Files/Material_Spec_Sheets/MSS_FDM_PC.pdf#_ga=1.150350320.756674248.1486067783. [Accessed 2017].

[16] Ultimaker, "Technical data sheet ABS," [Online]. Available: https://s3-eu-west-1.amazonaws.com/prod.ultimaker.com/download/materials/Ultimaker-ABS-(TDS).pdf. [Accessed 2017].

[17] Stratasys, "ABS-M30 Specification Sheet," [Online]. Available: http://global72.stratasys.com/~/media/Main/Files/Material_Spec_Sheets/MSS_FDM_ABSM30_0417a_Web.pdf#_ga=1.151530111.756674248.1486067783. [Accessed 2017].

[18] Stratasys, "ABSplus-P430 Specification Sheet," [Online]. Available: http://usglobalimages.stratasys.com/Main/Files/Material_Spec_Sheets/MSS_FDM_ABSplusP430.pdf#_ga=1.116982080.756674248.1486067783. [Accessed 2017].

[19] Stratasys, "High Temperature," [Online]. Available: http://www.stratasys.com/materials/polyjet/high-temperature. [Accessed 2017].

[20] Stratasys, "PolyJet Materials Data Sheet," [Online]. Available: http://global72.stratasys.com/~/media/Main/Files/Material_Spec_Sheets/MSS_PJ_PJMaterialsDataSheet.ashx#_ga=1.41820644.756674248.1486067783. [Accessed 2017].

[21] Stratasys, "Bio-compatible," [Online]. Available: http://www.stratasys.com/materials/polyjet/bio-compatible. [Accessed 2017].

[22] Stratasys, "Clear Bio-compatible (MED610) Specification Sheet," [Online]. Available: http://usglobalimages.stratasys.com/Main/Files/Material%20Cards/MC_PJ_Clear_Bio_Compatible_MED610.pdf?v=636059930208179011#_ga=1.108432836.756674248.1486067783. [Accessed 2017].

[23] Stratasys, "PC-ABS," [Online]. Available: http://www.stratasys.com/materials/fdm/pc-abs. [Accessed 2017].

Appendices

Appendix A: Detailed Drawing of Ostomy Guide

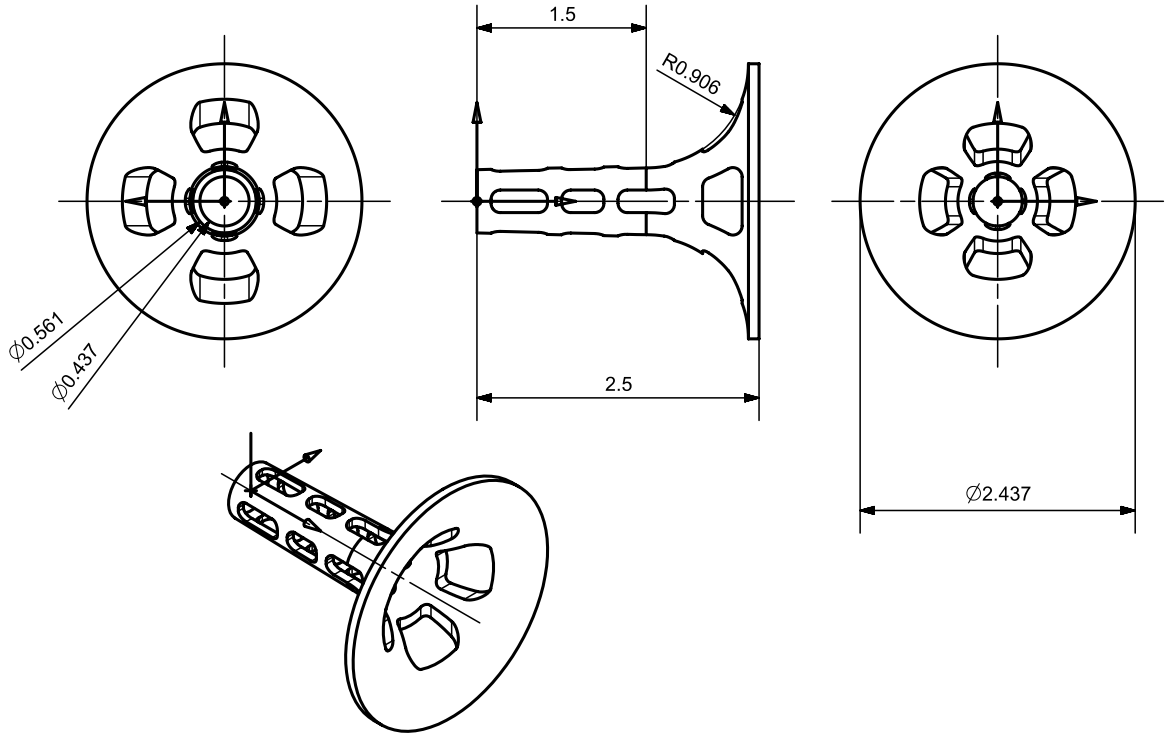

Title:	Ostomy Bag Aid
Material:	ABS Plastic
Date:	April 14th, 2017
Produced By:	William Gilroy-Briand
Scale:	1:1

Figure 13: CAD drawing of ostomy guide device.

Appendix B: Ostomy Guide Measurements

Table 9: Measurements of height of all printed parts including misprints.

Part	1	2	3	Average	Variance
Old Black	63.74	63.86	63.76	63.79	
New Black	63.82	63.76	63.87	63.82	
Blue*	63.72	63.82	63.78	63.77	
Yellow 1*	63.7	63.82	63.78	63.77	0.0011
Yellow 2*	63.68	63.85	63.71	63.75	
Yellow 3*	63.74	63.64	63.82	63.73	
White PC	63.68	63.75	63.73	63.72	

Table 10: Measurements of inner diameter of shafts of all printed parts including misprints.

Part	1	2	3	Average	Variance
Old Black	15.51	15.56	15.49	15.52	
New Black	16.6	16.59	16.5	16.56	
Blue*	15.63	15.59	15.62	15.61	
Yellow 1*	16	15.88	15.94	15.94	0.2018
Yellow 2*	16.48	16.48	16.5	16.49	
Yellow 3*	16.56	16.55	16.56	16.56	
White PC	15.89	15.92	15.88	15.90	

Table 11: Measurements of outer diameter of shaft of all printed parts including misprints.

Part	1	2	3	Average	Variance
Old Black	18.94	18.95	19.05	18.98	
New Black	18.86	18.9	18.86	18.87	
Blue*	18.92	18.93	18.85	18.90	
Yellow 1*	18.9	18.85	18.94	18.90	0.0017
Yellow 2*	18.93	18.91	18.95	18.93	
Yellow 3*	18.91	18.91	18.88	18.90	
White PC	18.98	18.95	18.99	18.97	

* Denotes misprinted part